Features

- 11A, 400V, RDS(on) = 0.436Ω @VGS = 10 V
- Low gate charge (typical 9.6 nC)
- Low Crss (typical 9.0pF)
- Fast switching
- 100% avalanche tested
- Improved dv/dt capability

General Description

This Power MOSFET is produced by using its own advanced planar stripe DMOS technology.This advanced technology has been especially tailored to minimize on-state resistance,provide superior switching performance,and withstand high energy pulse in the avalanche and commutation mode. These devices are well suited for high efficiency switched mode power supplies,active power factor correction based on half bridge topology.

ackage

1. Gate 2. Drain 3. Source

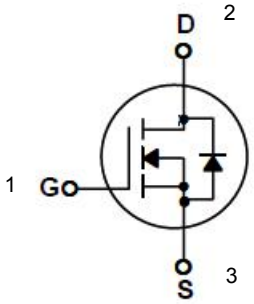

Symbol	Parameter	Value	Units
V_{DSS}	Drain-Source Voltage	400	V
I_D	Drain Current - Continuous (TC= 25°C)	11	A
	- Continuous (TC= 100°C)	7.5*	A
I_{DM}	Drain Current - Pulsed (Note 1)	44*	A
V_{GSS}	Gate-Source Voltage	± 30	V
E_{AS}	Single Pulsed Avalanche Energy (Note 2)	368	mJ
I_{AR}	Avalanche Current (Note 1)	11	A
E_{AR}	Repetitive Avalanche Energy (Note 1)	28	mJ
dv/dt	Peak Diode Recovery dv/dt (Note 3)	5	V/ns
P_D	Power Dissipation (TC = 25°C)	33.2	W
	- Derate above 25°C	0.26	W/°C
T_j , T_{stg}	Operating and Storage Temperature Range	-55 to +150	°C
T_L	Maximum lead temperature for soldering purposes,1/8" from case for 5 seconds	300	°C

* Drain current limited by maximum junction temperature

Thermal Characteristics

Symbol	Parameter	Value	Units
$R_{\theta JC}$	Thermal Resistance, Junction-to-Case	3.8	°C/W
$R_{\theta JS}$	Thermal Resistance, Case-to-Sink Typ.	--	°C/W
$R_{\theta JA}$	Thermal Resistance, Junction-to-Ambient	43.3	°C/W

Symbol	Parameter	Test Conditions	Min	Typ	Max	Units
Off Characteristics						
BV_{DSS}	Drain-Source Breakdown Voltage	V_{GS} = 0 V, I_D = 250 μA	400			V
ΔBV_{DSS} / ΔT_J	Breakdown Voltage Temperature Coefficient	I_D = 250 μA, Referenced to 25°C		0.43		V/°C
I_{DSS}	Zero Gate Voltage Drain Current	V_{DS} = 400 V, V_{GS} = 0 V			1	μA
		V_{DS} = 320 V, TC = 125°C			10	μA
I_{GSSF}	Gate-Body Leakage Current, Forward	V_{GS} = 30 V, V_{DS} = 0 V			100	nA
I_{GSSR}	Gate-Body Leakage Current, Reverse	V_{GS} = -30 V, V_{DS} = 0 V			-100	nA
On Characteristics						
$V_{GS(TH)}$	Gate Threshold voltage	V_{DS}=V_{GS}, I_D =250 uA	2.0		4.0	V
$R_{DS(On)}$	Drain-Source on-state resistance	V_{GS}=10 V, I_D = 5.5 A, T_J = 25°C		0.460	0.575	Ω
g_{FS}	Forward Transconductance	V_{DS} = 40 V, I_D = 5.5 A (Note 4)		6.5		S
Dynamic Characteristics						
C_{iss}	Input capacitance	V_{DS} = 25 V, V_{GS} = 0 V, f = 1.0 MHz		755		pF
C_{oss}	Output capacitance			132		pF
C_{rss}	Reverse transfer capacitance			9.0		pF
Switching Characteristics						
$t_{d(on)}$	Turn On Delay Time	V_{DD} = 200 V, ID = 11 A, R_G = 25 Ω (Note 4, 5)		11		ns
t_r	Rising Time			25		ns
$t_{d(off)}$	Turn Off Delay Time			28		ns
t_f	Fall Time			26		ns
Q_g	Total Gate Charge	V_{DS} = 320 V, ID = 11 A, V_{GS} = 10 V (Note 4, 5)		9.6		nC
Q_{gs}	Gate-Source Charge			3.0		nC
Q_{gd}	Gate-Drain Charge			2.5		nC
Drain-Source Diode Characteristics and Maximum Ratings						
I_S	Maximum Continuous Drain-Source Diode Forward Current				11	A
I_{SM}	Maximum Pulsed Drain-Source Diode Forward Current				44	A
V_{SD}	Diode Forward Voltage	V_{GS}= 0 V, I_S = 11 A			1.2	V
t_{rr}	Reverse Recovery Time	V_{GS} = 0 V, I_S = 11 A, dI_F / dt = 100 A/μs Note 4)		356		ns
Q_{rr}	Reverse Recovery Charge			2.4		μC

Notes:
1. Repetitive Rating : Pulse width limited by maximum junction temperature
2. L = 5.5 mH, IAS = 11 A, VDD = 50V, RG = 25 Ω, Starting TJ = 25°C
3. ISD≤11A, di/dt ≤200A/us, VDD ≤ BVDSS, Starting TJ = 25°C
4. Pulse Test : Pulse width ≤ 300us, Duty cycle ≤ 2%
5. Essentially independent of operating temperature

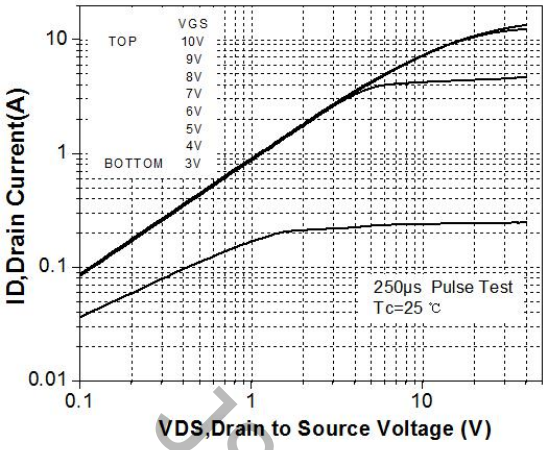

Figure 1. On-Region Characteristics

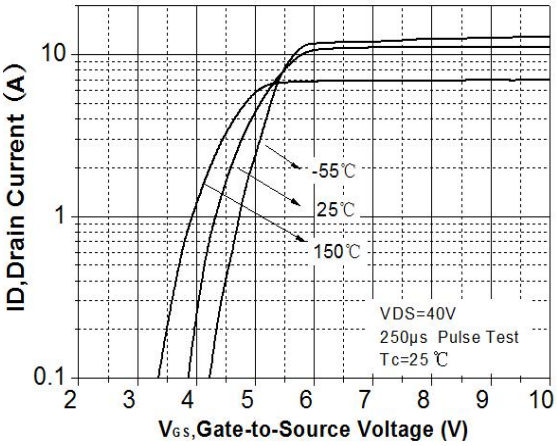

Figure 2. Transfer Characteristics

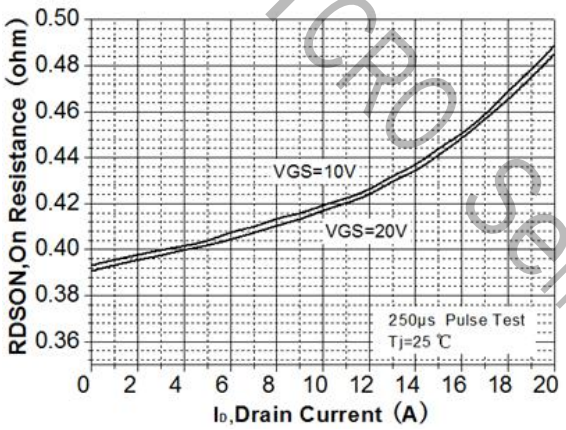

Figure 3. On-Resistance Variation vs Drain Current and Gate Voltage

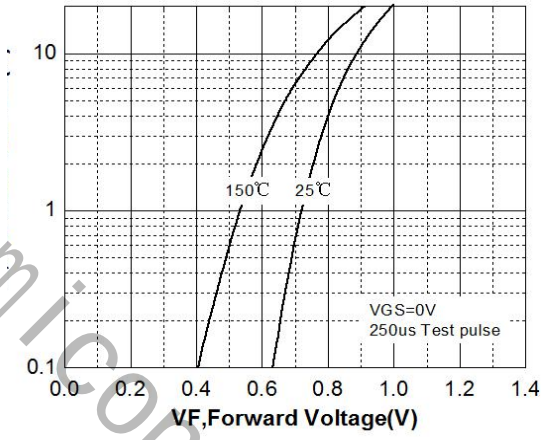

Figure 4. Body Diode Forward Voltage Variation with Source Current and Temperature

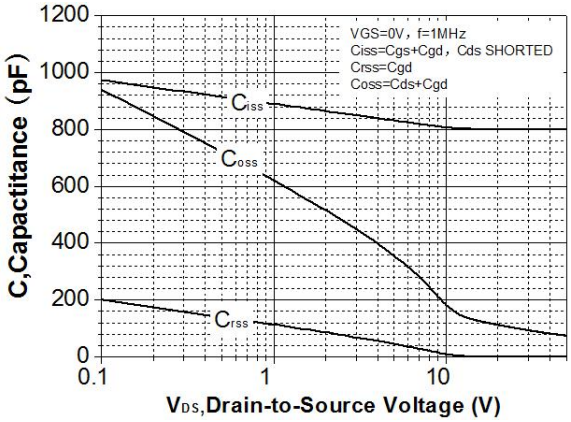

Figure 5. Capacitance Characteristics

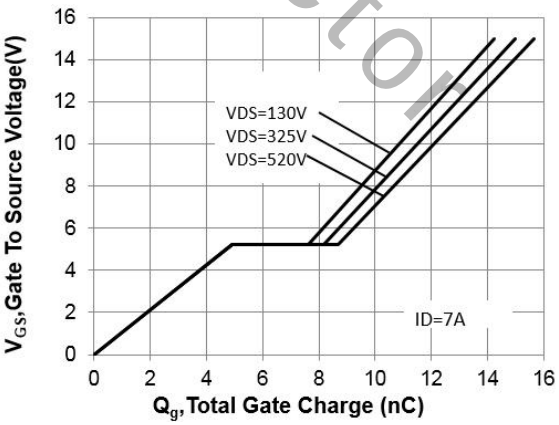

Figure 6. Gate Charge Characteristics

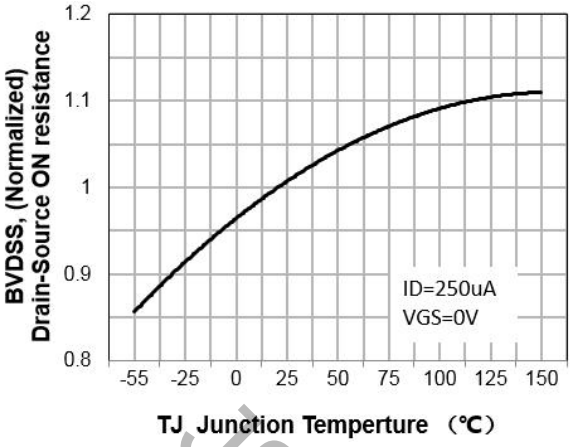

Figure 7. Breakdown Voltage Variation vs Temperature

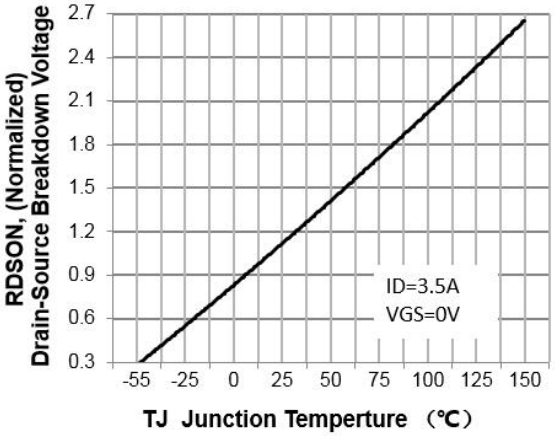

Figure 8. On-Resistance Variation vs Temperature

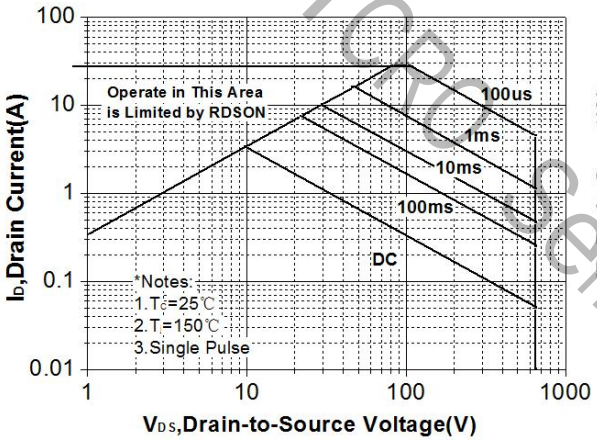

Figure 9. Maximum Safe Operating Area

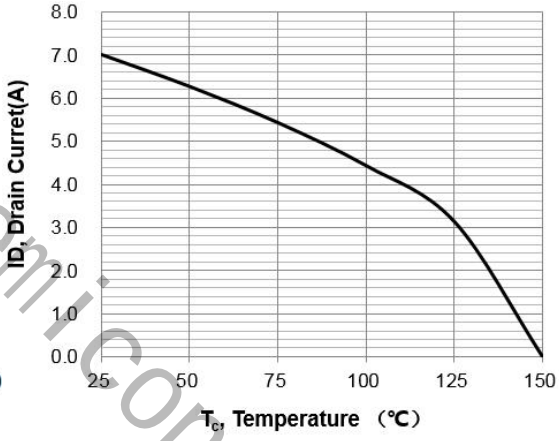

Figure 10. Maximum Drain Current vs Case Temperature

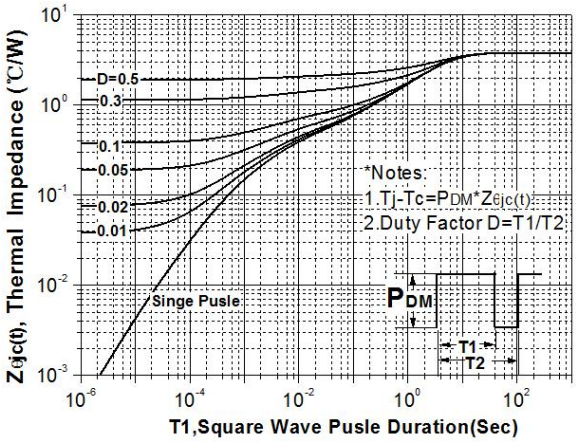

Figure 11. Transient Thermal Response Curve

Gate Charge Test Circuit & Waveform

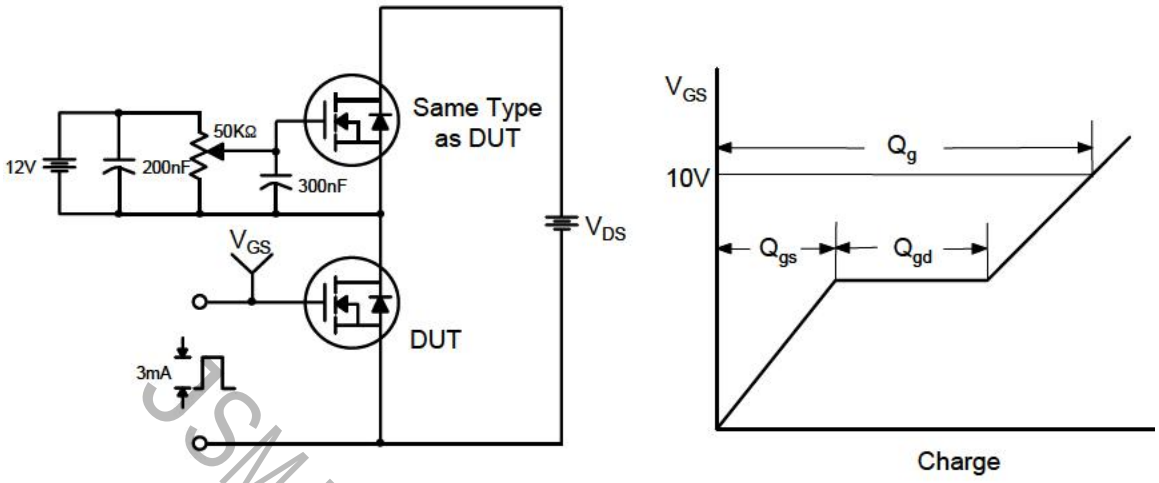

Resistive Switching Test Circuit & Waveforms

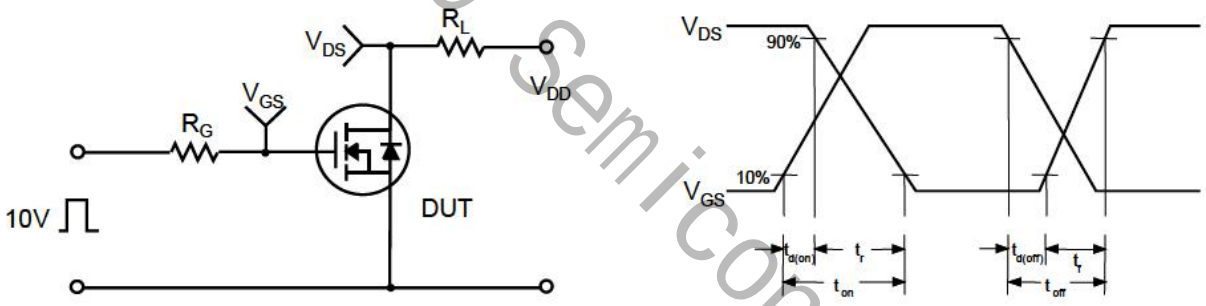

Unclamped Inductive Switching Test Circuit & Waveforms

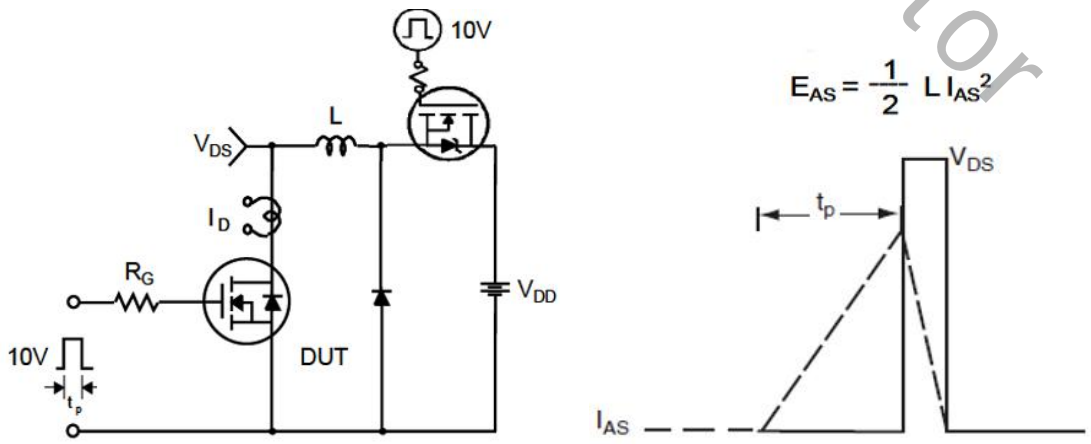

Peak Diode Recovery dv/dt Test Circuit & Waveforms

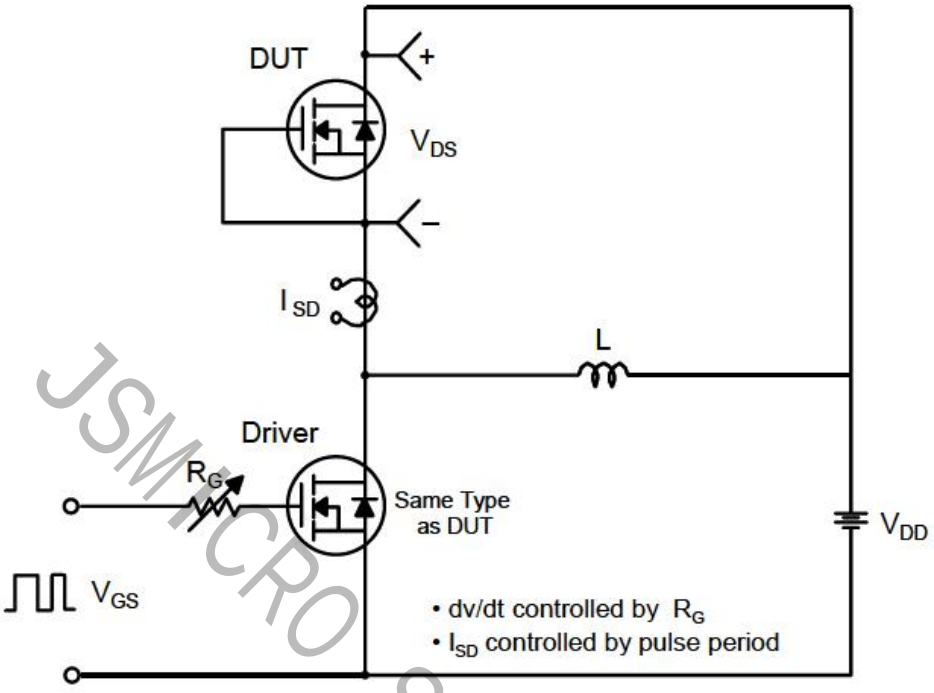

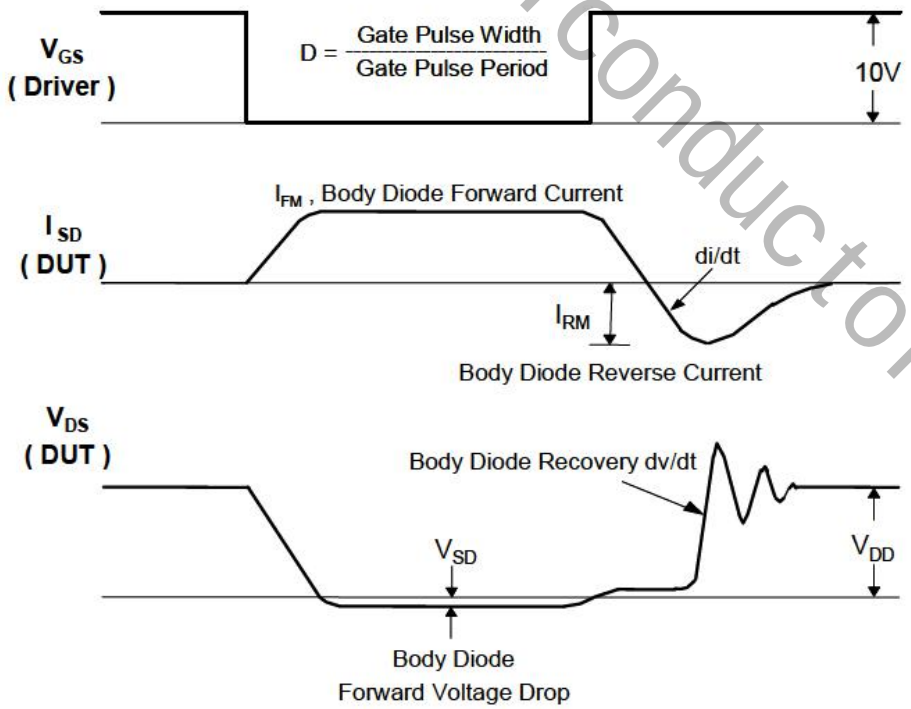

TO220F